komfovent®

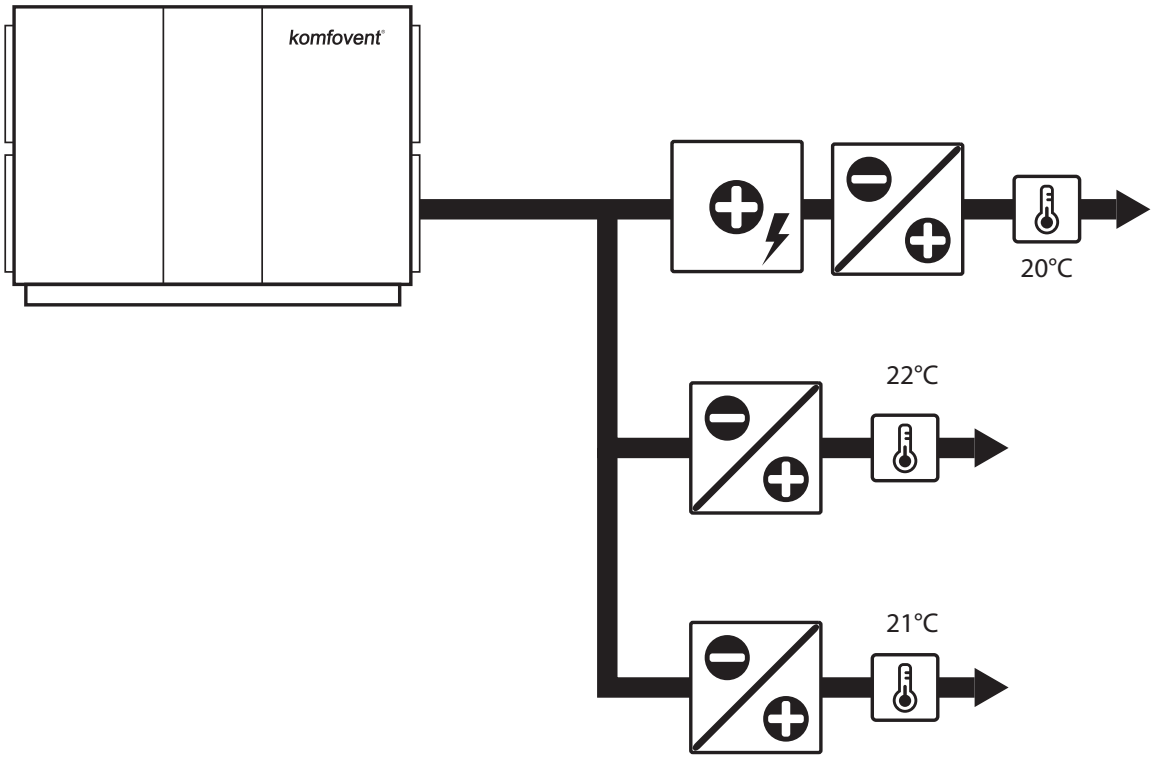

ADDITIONAL ZONE CONTROL C5

INSTALLATION MANUAL

EN

TABLE OF CONTENTS

1. INTRODUCTION

The equipment and functions described in this manual is to be installed by qualified professionals, who has enough experience and knowledge about electromechanical equipment and can work safely, according to local laws and regulations. Failure to comply with instructions in this manual will void the warranty of the equipment, and may result in damage to property or injuries to people. All illustrations in this manual are for explanation purposes and may differ from actual product.

Additional zone control function is available for Verso Standard and Verso Pro/Pro 2 air handling units with C5 controller. This function allows to have up to three different temperature zones in the same ventilation system. Temperature in the main zone will be maintained by the existing heaters/coolers of the AHU. Different temperatures in two additional zones can be maintained, by connecting two zone modules, which will control additional duct mounted heaters/coolers and temperature sensors connected. Temperature set-point for each independent temperature zone, will be available from the control panel of the AHU.

If needed, zone modules can also control additional heaters/coolers to be used in the same airflow as additional steps, when main heater/cooler power is not enough. In that case additional temperature sensors is not needed and only one main temperature set-point is used.

1.1. Application examples for Verso Standard units

- Three independent temperature zones

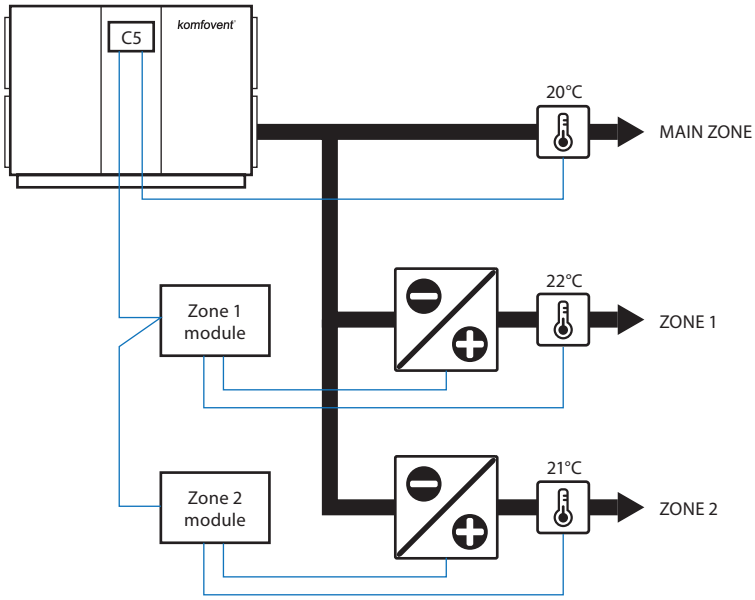

- Two independent temperature zones and pre-heater

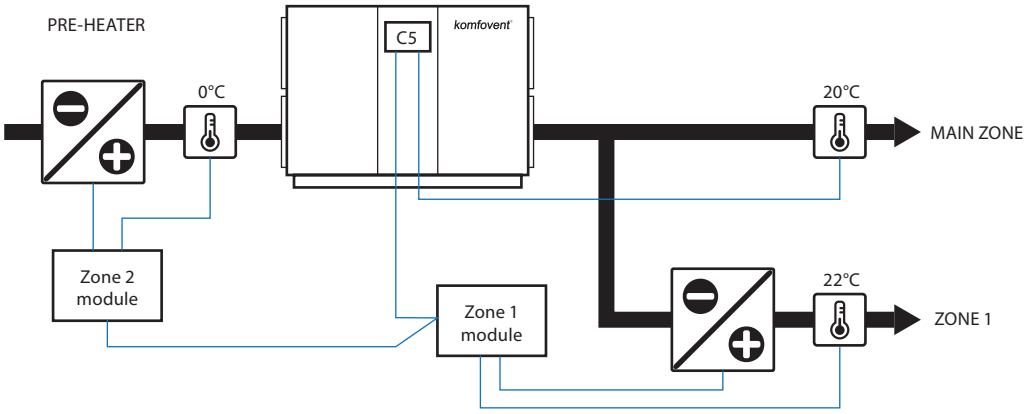

- Additional heating/cooling steps with one temperature setpoint

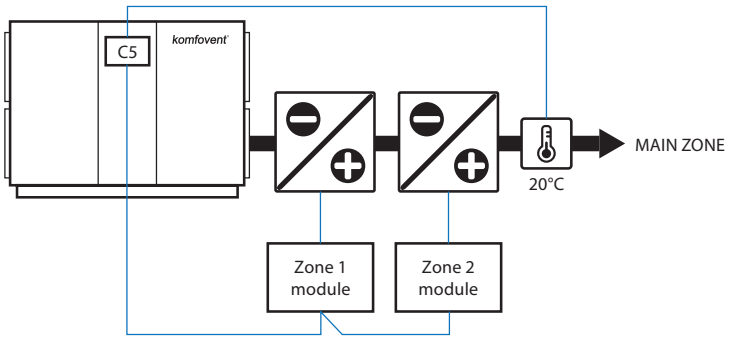

1.2. Application examples for Verso Pro units

- Three independent temperature zones

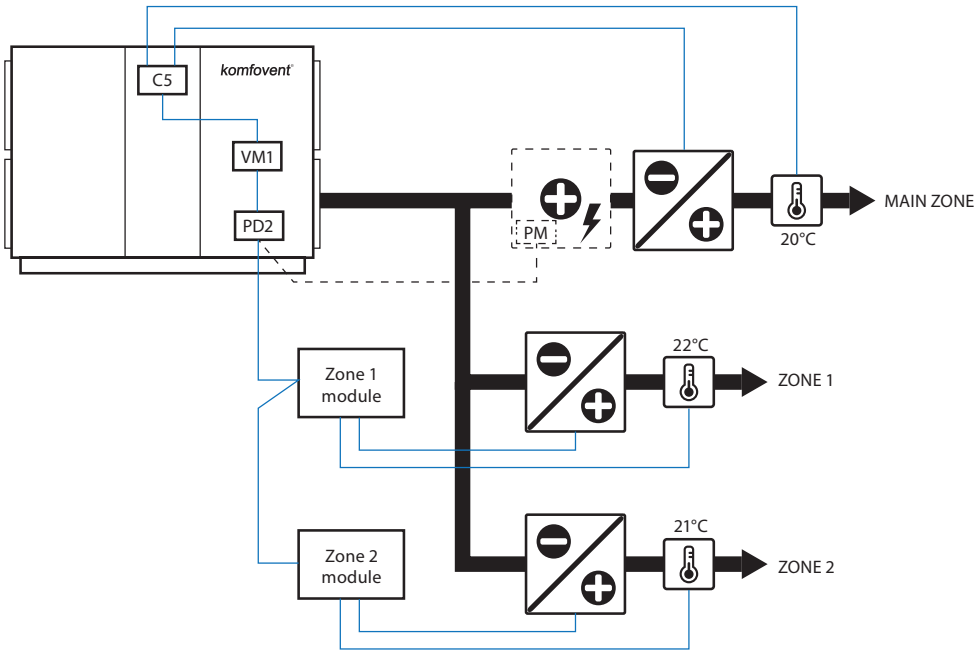

- Three independent temperature zones with duct mounted electrical heater sections*

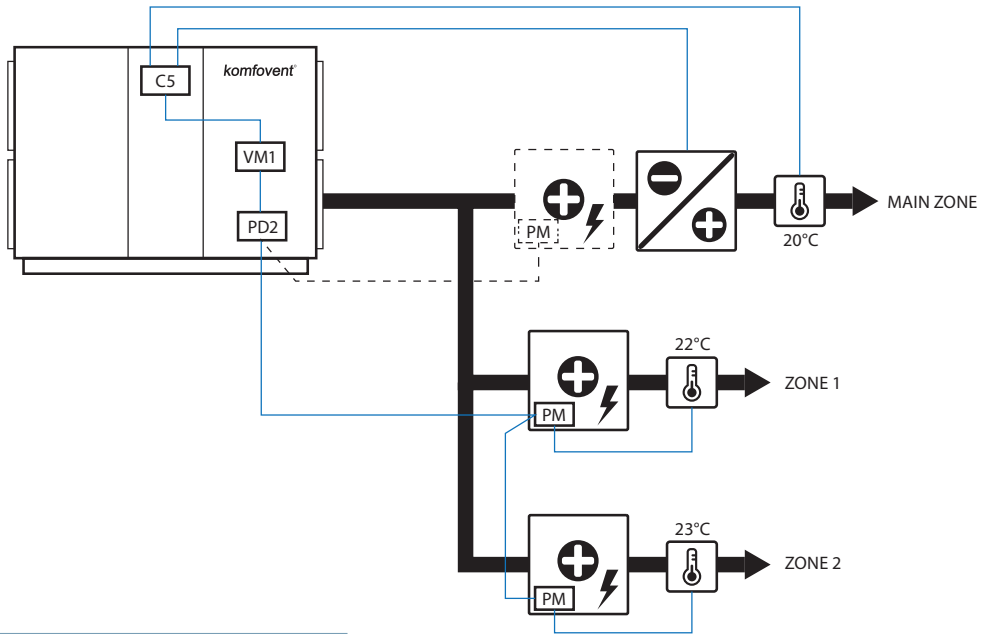

* If complete Verso Pro/Pro 2 electrical heater section is used, additional zone control modules are not needed and PM boards inside of electrical heater section will be used for the same purpose.

- Two independent temperature zones and pre-heater

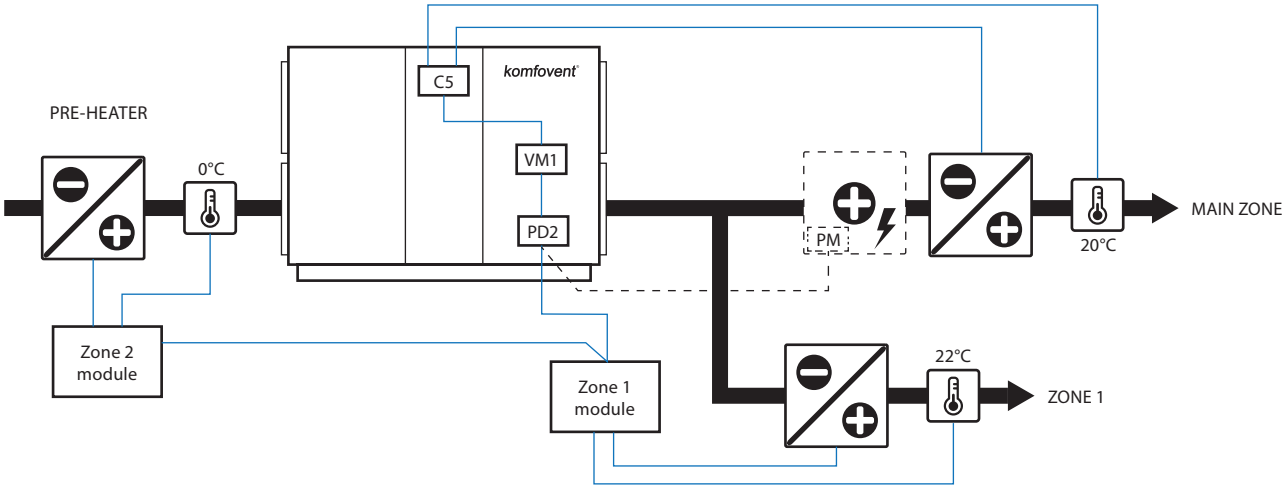

- Additional heating/cooling steps with one temperature setpoint

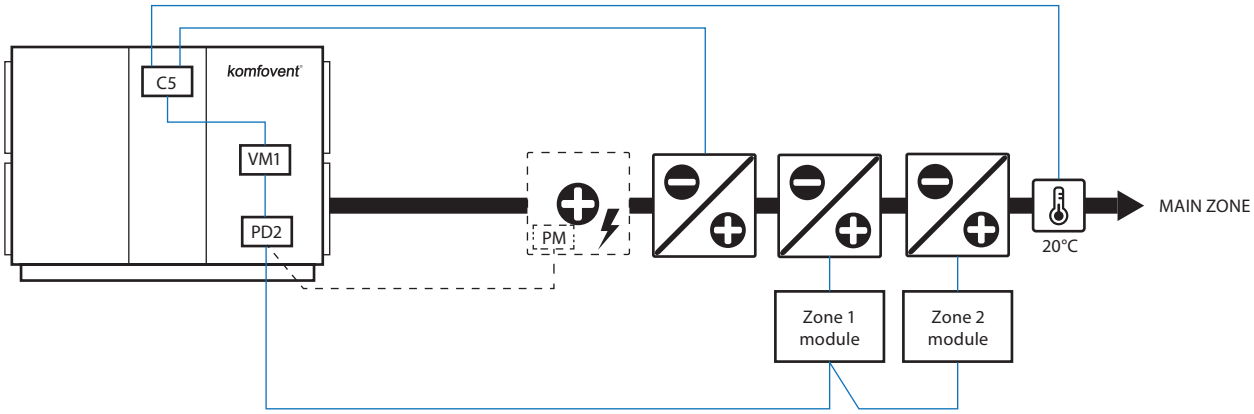

- Additional heating/cooling steps with duct mounted electrical heater sections* and one temperature setpoint

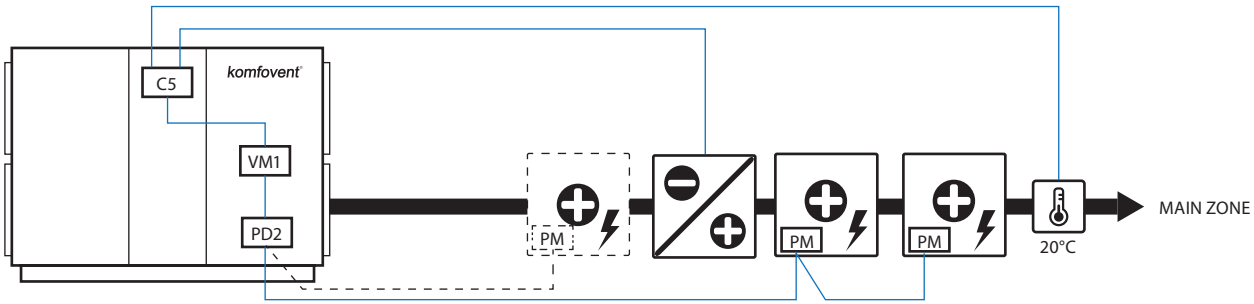

1.3. Application examples for Verso Pro 2 units

Additional zones on Verso Pro 2 units can be used the same way as shown in examples of section 1.2, But instead of connecting zone modules to PD2 connection box, they are connected to dedicated contacts inside of C5 automation box (for more information see section 2.3).

* If complete Verso Pro/Pro 2 electrical heater section is used, additional zone control modules are not needed and PM boards inside of electrical heater section will be used for the same purpose.

2. INSTALLATION

For additional zone temperature control it is needed:

a) Zone module.*

b) Supply air temperature sensor (for independent temperature zones or pre-heater control).

c) Return water temperature sensor (for water heater, when frost protection of the coil is needed).

d) Duct mounted heating/cooling device with additional components needed for its operation.

e) Connection cables.

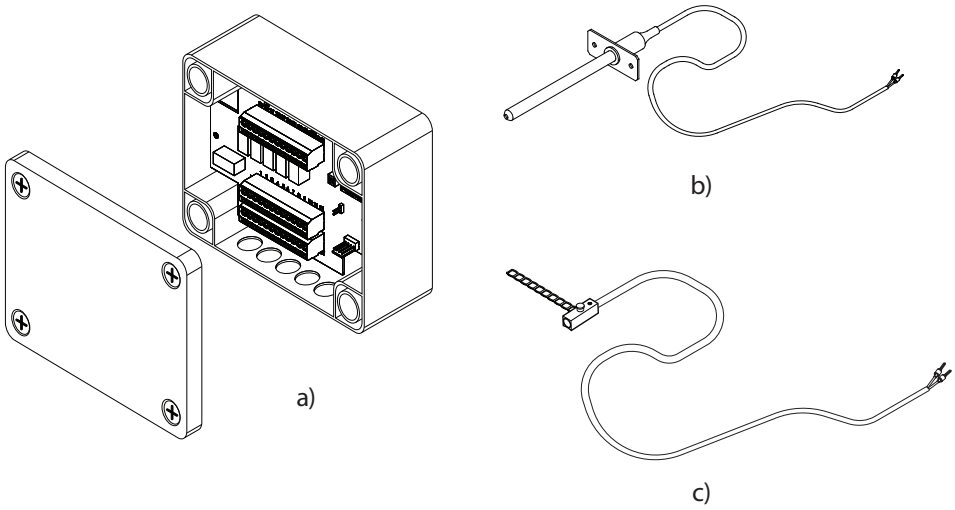

Zone module box can be installed in any place near external duct mounted heater/cooler, which will be controlled. It should be prevented from direct water drops and sun. All the cables going in/out of the zone module box must be sealed ensuring protection from humidity and dust.

When temperature maintenance is needed in different (independent) temperature zones, supply temperature sensor must be installed after the heating/cooling device. In cases if zone module is used to control a preheater, temperature sensor must be installed between preheater and the AHU. Supply temperature sensor should be mounted in the straight air duct after heating/cooling device (or pre-heater) at a distance of at least of two duct diameters (or two diagonals of the rectangular duct). In cases if zone module is used to control a preheater, temperature sensor must be installed between preheater and the AHU. For outdoor units, when choosing a place for temperature sensor placement, please avoid direct sunlight which can affect temperature readings.

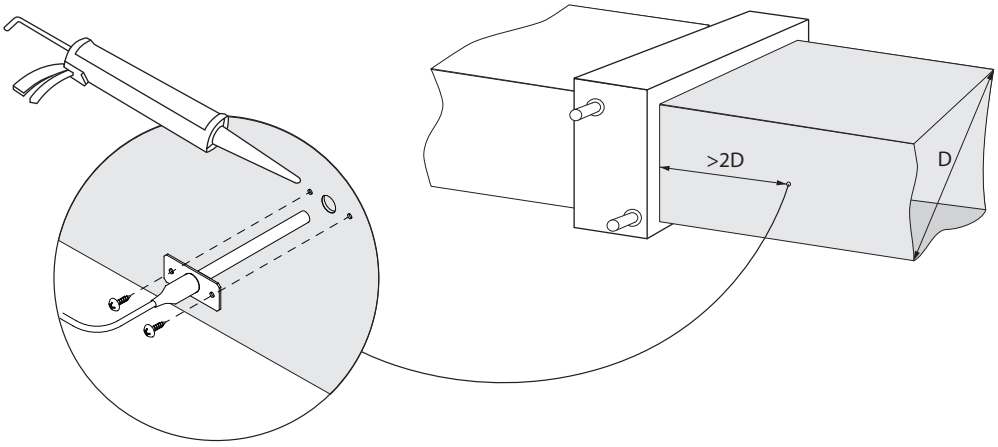

When water heater is used as a heater or pre-heater, return water temperature sensor must be installed on the return water pipe as close to the coil as possible and must be properly insulated, thus the surrounding temperature will not affect its measurement. This sensor is used for frost protection of the water coil. If there is no need for frost protection (for example ethylene glycol is used as a medium instead of water), return water sensor will not be used.

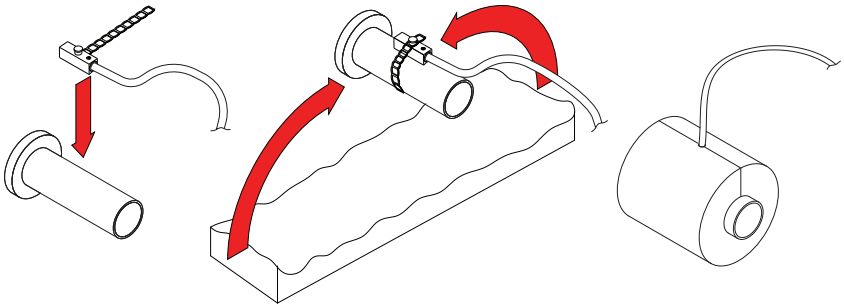

* If complete Verso Pro/Pro 2 electrical heater section is used, additional zone control modules are not needed and PM boards inside of electrical heater section will be used for the same purpose.

2.1. Zone module connection to Verso Standard units

To Verso Standard AHU zone module must be connected to external connection terminals of C5 controller board. Depending on the AHU model, C5 board is located in the heat exchanger section or in the automation box (for C5 board position please refer to the "Verso Standard installation manual"). Also external 24 VDC power supply is needed.

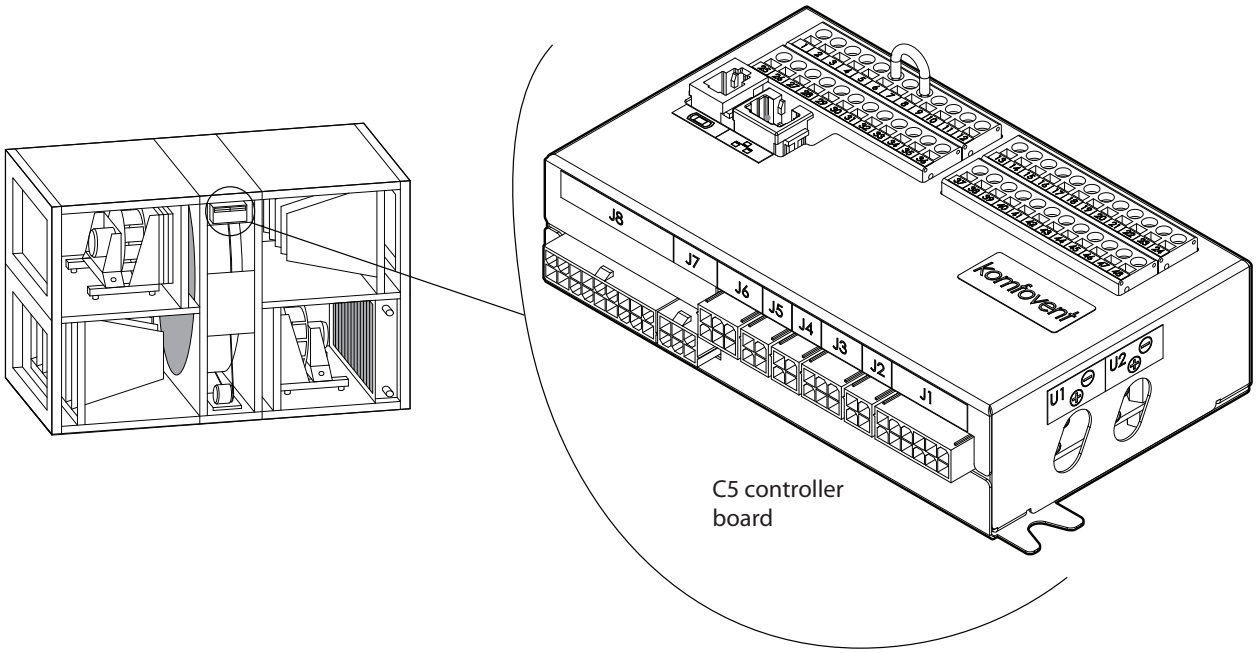

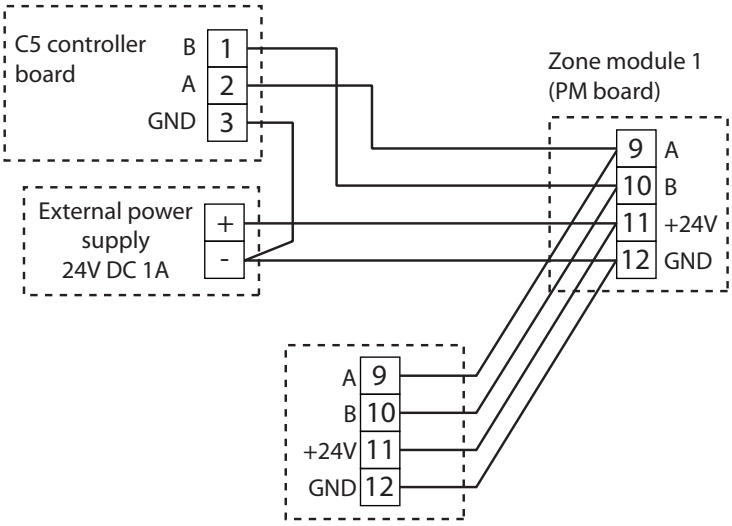

CAT5 or similar twisted pair cable is recommended for the connection. If more than one zone module will be used, the second module can be connected in parallel from the C5 board or from the first zone module. Maximum length of the cable from C5 board to the last zone module cannot exceed 150 m.

2.2. Zone module connection to Verso Pro units

To Verso Pro unit zone module must be connected to connection box PD2. Connection box is located in the supply fan section, fixed on the wall near the supply air outlet. Depending on the AHU model, inside of the PD2 box it can already be connected cable for electrical heater section (please refer to the wiring diagram of the exact unit). In that case zone module cable is connected to the same contacts, without disconnecting electrical heater cable.

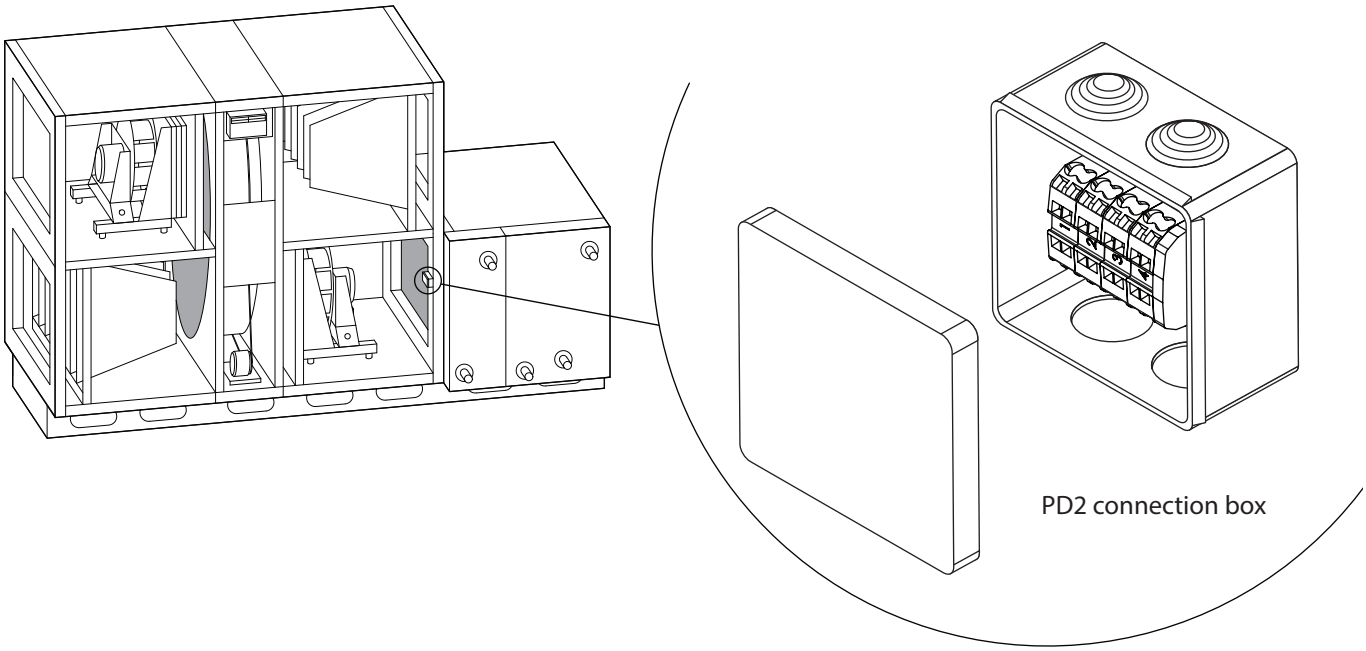

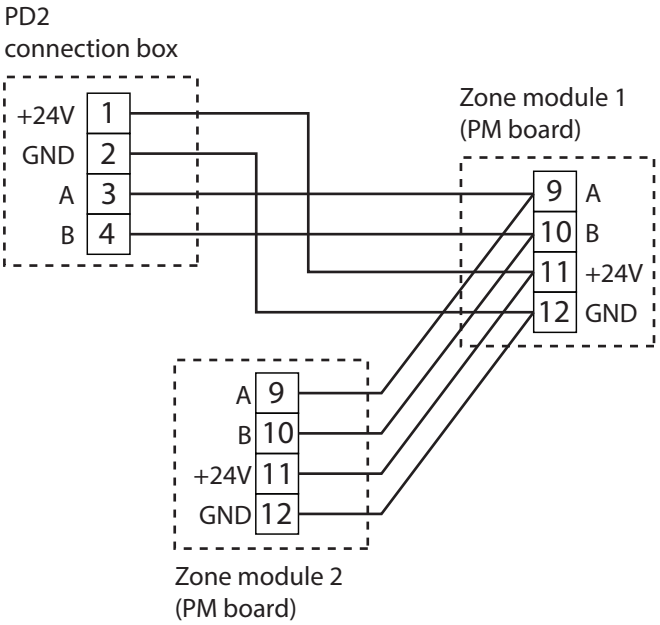

CAT5 or similar twisted pair cable is recommended for the connection. If more than one zone module will be used, the second module can be connected in parallel from the PD2 box or from the first zone module. Maximum length of the cable from C5 board to the last zone module cannot exceed 150 m.

Zone control module is not needed, if complete Verso Pro electrical heater section is used as additional temperature zone heater or additional heating step (see application examples in section 1.2.). In such case the electrical wiring is the same as above, but cable from PD2 box is connected directly to the PM board located inside of electrical heater.

2.3. Zone module connection to Verso Pro 2 units

To Verso Pro 2 unit zone module must be connected to the dedicated terminals inside of the main automation box. Automation box cover is removed by unscrewing four screws and pressing sides of the box to release fixing clips.

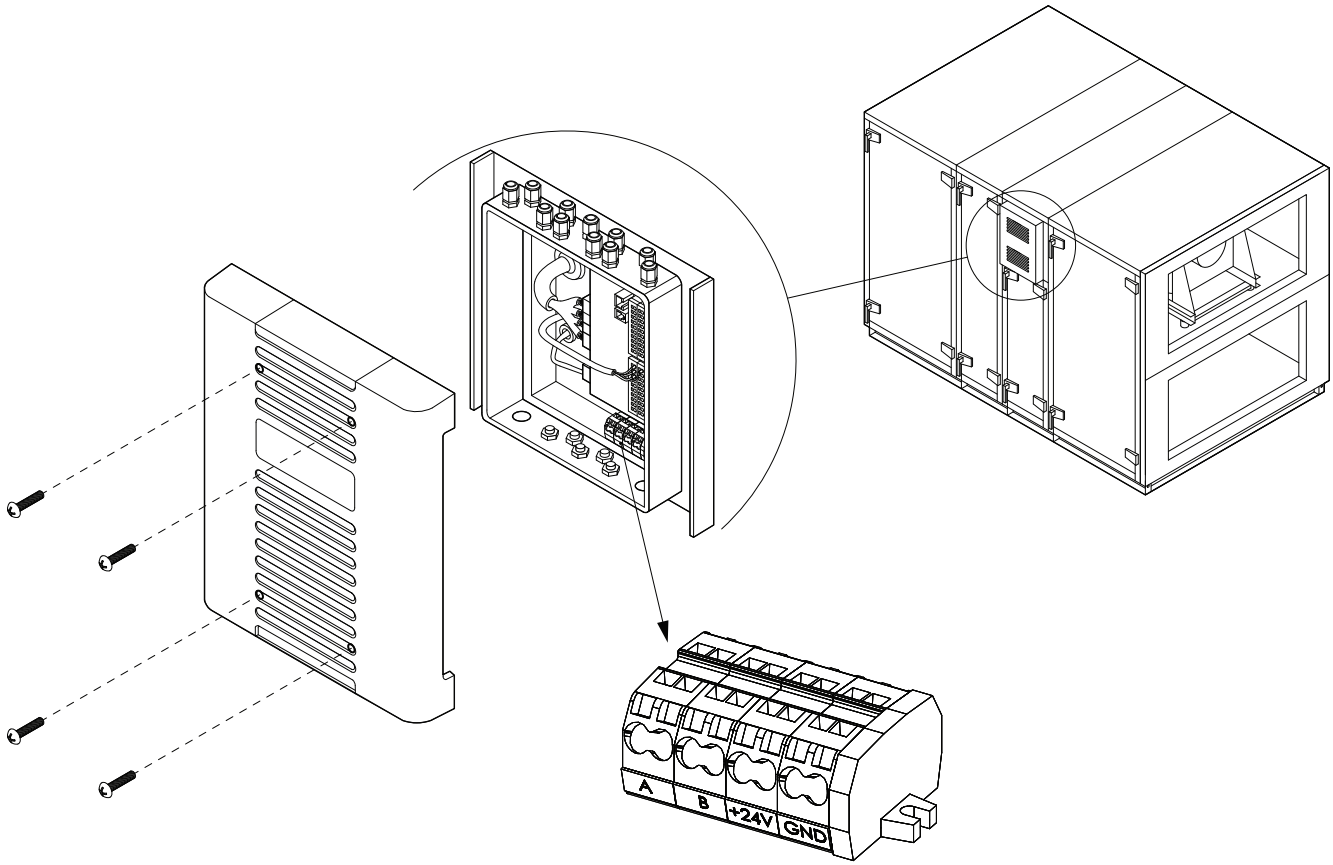

Zone connection terminals
inside automation box

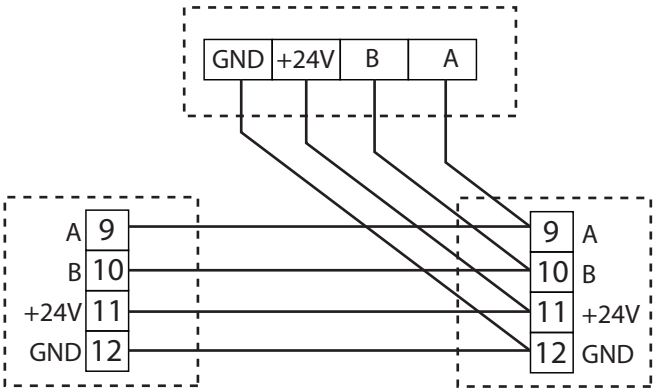

Zone module 2
(PM board)

Zone module 1
(PM board)

CAT5 or similar twisted pair cable is recommended for the connection. If more than one zone module will be used, the second module can be connected in parallel from the automation box or from the first zone module. Maximum length of the cable from C5 board to the last zone module cannot exceed 150 m.

Zone control module is not needed, if complete Verso Pro 2 electrical heater section is used as additional temperature zone heater or additional heating step (see application examples in section 1.2.). In such case the electrical wiring is the same as above, but cable from automation box is connected directly to the PM board located inside of electrical heater or pre-heater.

3. CONFIGURATION AND WIRING

Depending on the application, different zone module configuration is available. Configuration is made by DIP-switches on the electronic board of the zone module. SW1 switch is intended for zone number selection and SW2 switch is for heater/cooler configuration.

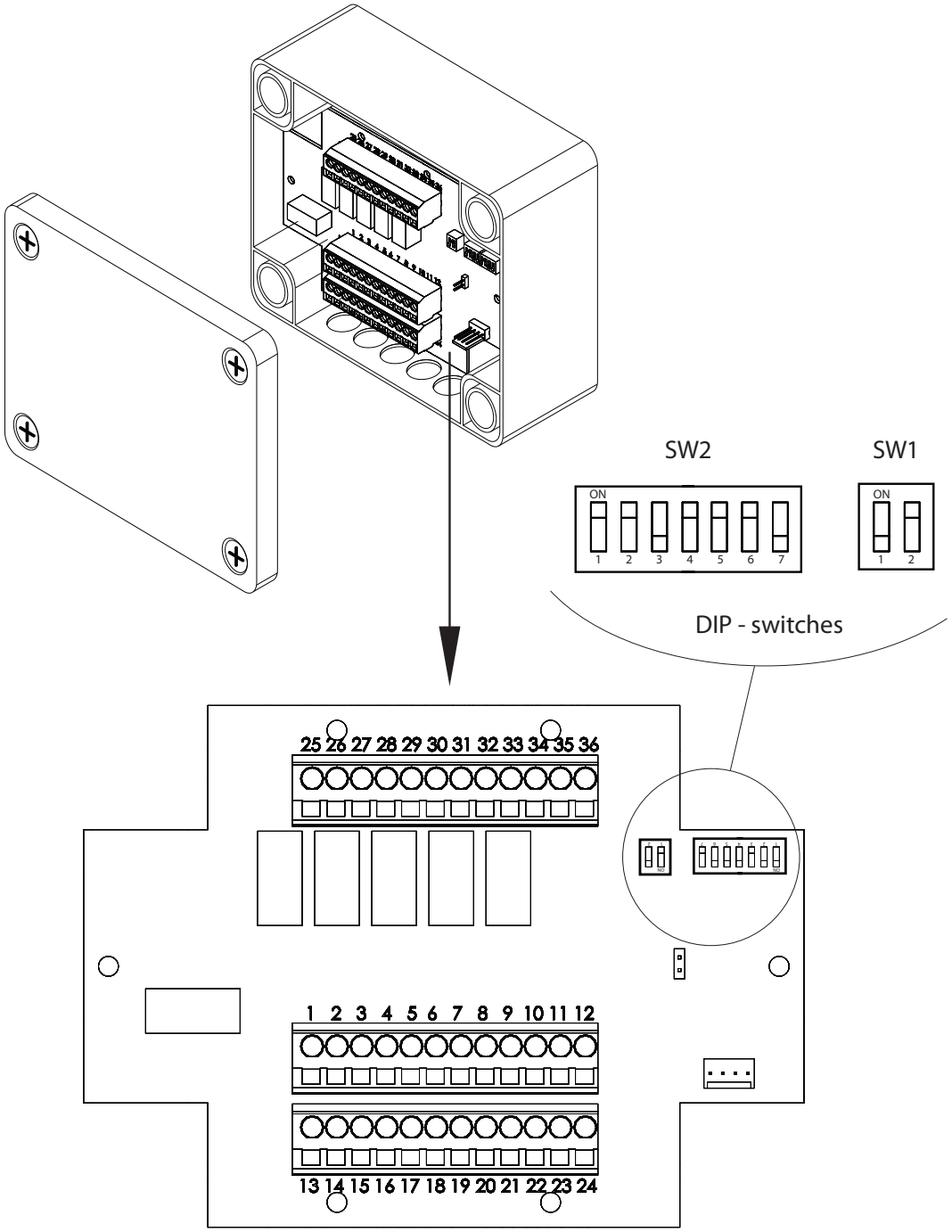

At first assign zone number to the zone module by configuring SW1 DIP-switches as follows:

SW1	
Zone 1	ON 1 2
Zone 2	ON 1 2

3.1. Zone module configuration for water heater/cooler

Zone module can control following types of duct mounted water heaters/coolers:

- **Water heating coil** – separate water heater with three way valve actuator and circulation pump
- **Water cooling coil** – separate water cooler with three way valve actuator and circulation pump
- **Water heating and water cooling coils at the same time** – two water coils (one for heating and one for cooling), two three way valve actuators and two circulation pumps.
- **Combi-coil** – the same one water coil, one three way valve and one circulation pump will be used for heating and for cooling. Additional input is needed to switch between heating/cooling modes (for example from the thermostat or signal from boiler).

If water heaters/coolers are intended to be used in negative air temperatures frost protection is needed. For this purpose return water sensor must be installed (see section 2) and SW2 DIP switches configured accordingly. For extra protection, additional capillary thermostat can also be connected. Frost protection is not needed if antifreeze solution (for example ethylene glycol) is used as heating/cooling medium in the coils.

	Water heater/cooler	SW2
Without frost protection	Heating	
	Cooling	
	Heating+Cooling	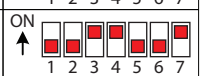
	Combi-coil (heating/cooling)	
With frost protection	Heating	
	Cooling	
	Heating+Cooling	
	Combi-coil (heating/cooling)	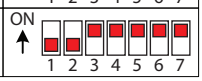

Electrical wiring of external components:

ZONE MODULE (PM BOARD)																																			
Output			Output			Input		Modbus				Input		Input		Input		Input		Input		Input		Output						Output					
1	2	3	4	5	6	7	8	9	10	11	12	13	14	15	16	17	18	19	20	21	22	23	24	25	26	27	28	29	30	31	32	33	34	35	36
GND	+24V	0..10V	GND	+24V	0..10V	GND	0..10V	A	B	+24V	GND	NTC		NTC		NO	C	NO	C	NO	C	NO	C							C	NO1	NO2	NO3	NO4	NO5
Hot water/Combi-coil mixing valve			Cold water mixing valve					Communication with AHU				Supply air temperature sensor		Return water temperature sensor		Frost protection thermostat Open=OK, Close=Alarm		Combi-coil reverse Open=Heating, Close=Cooling												Common	Heating/Combi	Cooling			
																														Water circulation pump					

3.2. Zone module configuration for modulating type direct expansion (DX) units

Zone module can control DX units, where unit capacity is regulated by 0..10 V signal. Depending on the DX unit model, if needed, additional digital outputs are available for switching heating/cooling modes and start signal. Capacity regulation can be controlled in three ways:

- **Universal** – capacity is regulated according to P.I. law, using 0..10 V signal. Higher voltage signal demands higher capacity from the DX unit.
- **Temperature setpoint*** – capacity is regulated by requesting exact temperature setpoint from the DX unit air temperature sensor. Analog control signal of 2,2..10 V is provided, which corresponds to 11..50°C temperature setpoint for the DX unit.
- **Daikin** – special regulation for DX units with 0..5..10 V capacity regulation, used in some of Daikin DX models. Depending on the signal, DX unit can decrease capacity (signal between 0..5V), increase capacity (signal between 5..10V), or maintain actual capacity (signal 5V).

Modulating DX	SW2
Universal (0..10 V)	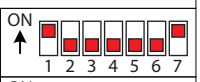
Temperature setpoint (11..50°C)	
Daikin (0..5..10 V)	

Electrical wiring of external components:

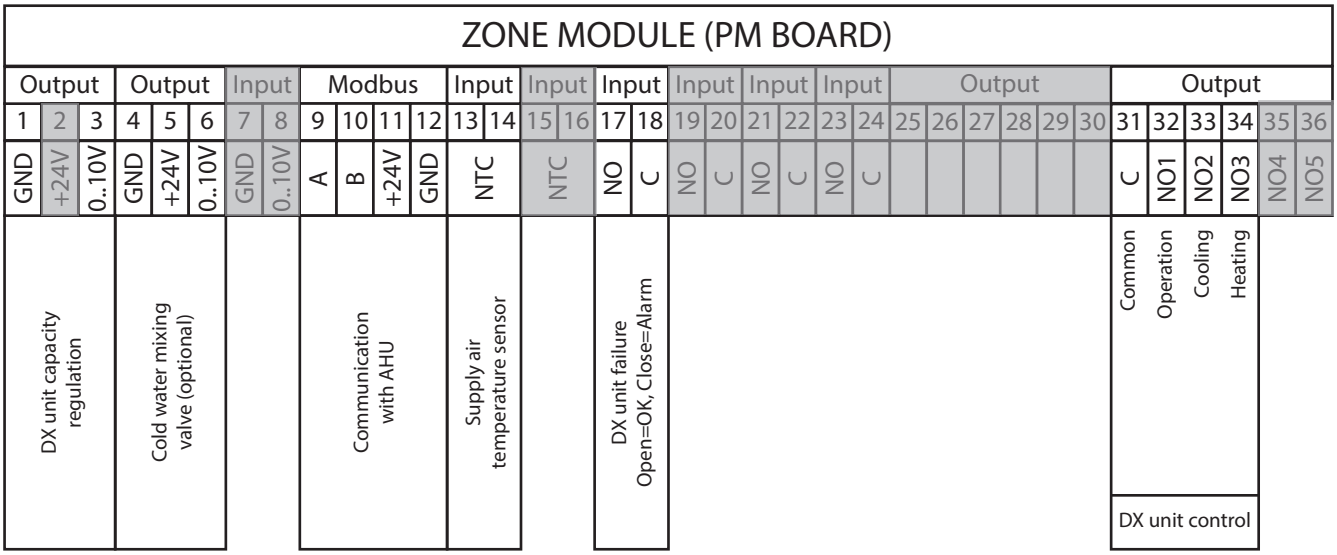

* Only with compatible DX unit models.

3.3. Zone module configuration for ON/OFF type direct expansion (DX) units

Zone module can control DX units, which do not have capacity regulation and needs only On/Off signal. Such type of units also can be reversible, meaning that DX unit can operate in both modes: cooling and heating. If DX unit is not reversible, by default it will be operating only in cooling mode. Up to four separate DX units can be connected in steps and controlled in two different ways:

- **Sequence** – when all DX units are starting one after another if air temperature is not reached after previous step. This type is recommended when capacities of DX units are equal. Example of sequence control: Step1= DX1, Step2=DX1+DX2, Step3=DX1+DX2+DX3.
- **Binary** – when all DX units are starting according binary code and in such a way more steps can be achieved. This type is recommended when capacities of DX units are different and, in ideal case, the capacity of each of the following DX unit is double the previous. Example of binary control: Step1= DX1, Step2= DX2, Step3=DX1+DX2, Step4=DX3, Step5=DX3+DX1, Step6=DX3+DX2, Step7=DX3+DX2+DX1.

On/Off DX without reverse		SW2
Sequence	1 step	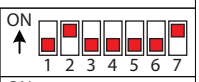
	2 step	
	3 step	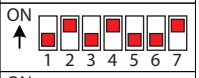
	4 step	
Binary	1 step	
	2 step	
	3 step	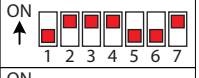
	4 step	

On/Off DX with reverse		SW2
Sequence	1 step	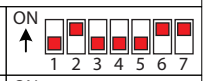
	2 step	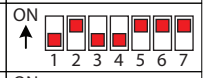
	3 step	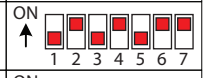
	4 step	
Binary	1 step	
	2 step	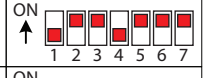
	3 step	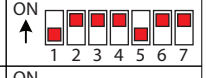
	4 step	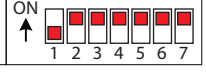

Electrical wiring of external components:

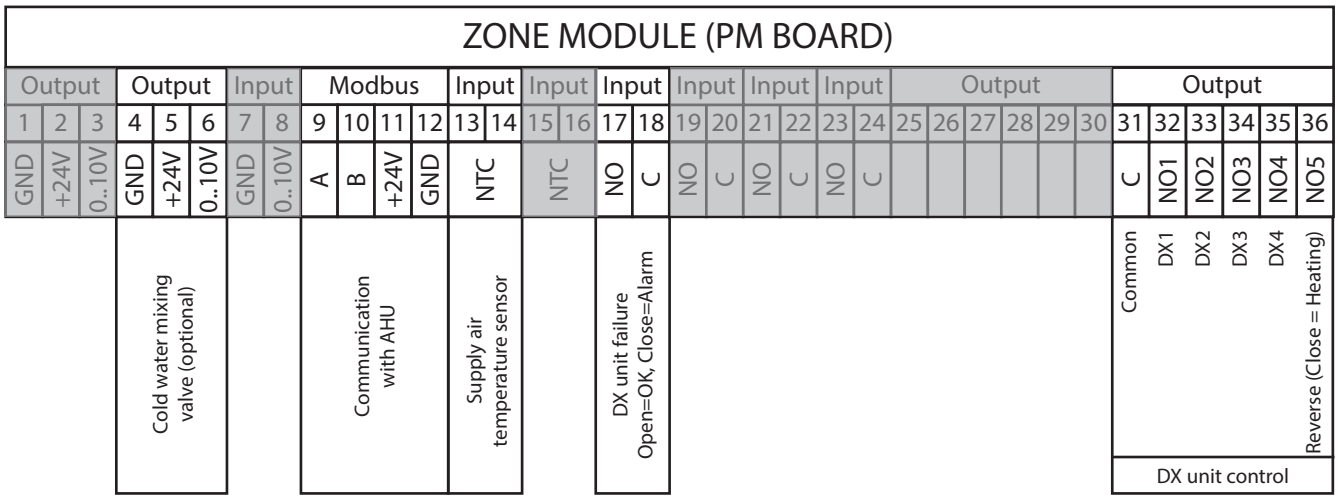

3.4. Zone module configuration for additional electrical heater

Complete Verso Pro/Pro 2 electrical heater section can be used for zone control function. Since inside of the section there is already PM board installed, additional zone module is not needed. Cables are connected directly to the PM board and only SW1 DIP-switches should be configured to indicate zone number (see page 10). If electrical heater will be used to maintain temperature of the independent temperature zone, additionally it will be needed to connect supply temperature sensor. Do not change SW2 DIP-switches or any cables that are already connected to the PM board of electrical heater section, since it is used for heater operation.

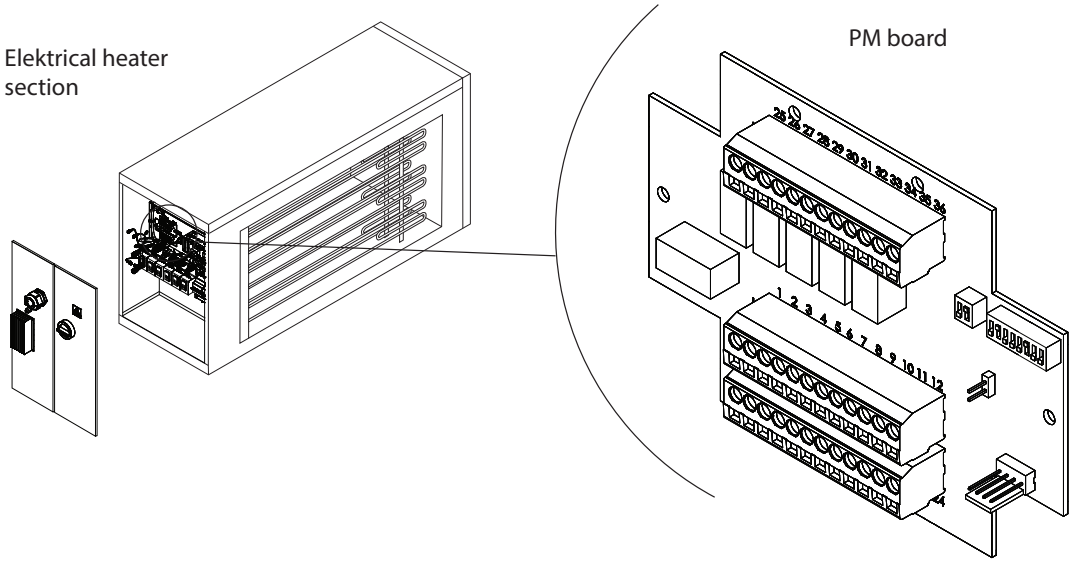

Electrical wiring of external components:

PM BOARD																																							
Output			Output			Input		Modbus				Input		Input		Input		Input		Input		Input		Output						Output					
1	2	3	4	5	6	7	8	9	10	11	12	13	14	15	16	17	18	19	20	21	22	23	24	25	26	27	28	29	30	31	32	33	34	35	36
GND	+24V	0..10V	GND	+24V	0..10V	GND	0..10V	A	B	+24V	GND	NTC		NTC		NO	C	NO	C	NO	C	NO	C							C	NO1	NO2	NO3	NO4	NO5
								Communication with AHU				Supply air temperature sensor																							

4. SETTINGS ON THE C5 CONTROLLER

Initial zone setup is done from the computer connected to the AHU directly, via local network or internet. This can be done by authorized service personnel only.

If zone control function was not ordered in advance and if it was not activated from the factory, at first it is needed to log in to the "Factory" level and activate one or two additional zones.

▼STRUCTURE

Heat exchanger	Rotary
Supply air fan	☑
Exhaust air fan	☑
Outdoor air filter	☑
Extract air filter	☑
Air dampers	☑
Electric heater	☐
Water heater	☑
Water cooler	☐
DX unit	☐
Recirculation	☐
Humidity control unit	None
Heat pump	☐
Additional zone 1	☑
Additional zone 2	☑
CF defrost module	☐

If zone control function was ordered in advance and if it was activated from the factory or in a way described above, log in into the "Service" level and navigate to "Functions screen". Enable which additional zones will be used. For the control of independent temperature zones or pre-heater (see application examples in section 1), check mark option "Independent" and enter desired temperature setpoint.

▼1ST ADDITIONAL ZONE CONTROL (ZN1)

Enable	☑
Setpoint	20.0 °C
Kp	120
Ki	8
Independent	☑

After independent temperature zone was configured, temperature setpoint can be adjusted from the user level on the computer or from the control panel.

In cases when zone module is used for additional heating/cooling steps and should start when the capacity of main heaters/cooler is not enough (see application examples in section 1), leave the “Independent” check box empty and main temperature setpoint set in the “Operation modes” will be used.

▼2ND ADDITIONAL ZONE CONTROL (ZN2)

Enable	☑
Setpoint	22.0 °C
Kp	120
Ki	8
Independent	☐

Additionally, for such regulation, it is needed to configure “Heating/cooling sequence” (Service level ->Functions) and select the order in which heating/cooling devices and zone modules should operate.

▼HEATING/COOLING SEQUENCE

Stage 1	Water
Stage 2	Zone1
Stage 3	Zone2
Stage 4	DX
Stage 5	Electric
Stage 6	Heat pump
Min. switching delay between heating/cooling	20 min

LITHUANIA

UAB KOMFOVENT

TECHNINĖS PRIEŽIŪROS SKYRIUS / SERVICE AND SUPPORT
Phone: +370 5 200 8000
Email: service@komfovent.com
www.komfovent.com

RUSSIA

ООО «КОМФОВЕНТ»
Ул. Выборгская д. 16, стр. 1,
2 этаж, 206 офис, Москва, Россия
Тел. +7 499 673 22 73
info.ru@komfovent.com
www.komfovent.ru

ООО «КОМФОВЕНТ»
Ряжское шоссе, 20 литера Е, пом Н6
390017 г. Рязань, Россия
Тел.: +7 491 255 95 71
info.ru@komfovent.com
www.komfovent.ru

BELARUS

ИООО «Комфовент»
ул. Уручская 21 – 423,
220125 г. Минск, Беларусь
Тел. +375 17 266 5297, 266 6327
info.by@komfovent.com
www.komfovent.by

SWEDEN

Komfovent AB
Ögärdesvägen 12B
433 30 Partille, Sverige
Tel. +46 31 487 752
info_se@komfovent.com
www.komfovent.se

PARTNERS

AT	J. PICHLER Gesellschaft m. b. H.	www.pichlerluft.at
BE	Ventilair group	www.ventilairgroup.com
	ACB Airconditioning	www.acbairco.be
CZ	REKUVENT s.r.o.	www.rekuvent.cz
CH	WESCO AG	www.wesco.ch
	SUDCLIMATAIR SA	www.sudclimatair.ch
	CLIMAIR GmbH	www.climair.ch
DK	Øland A/S	www.oeland.dk
EE	BVT Partners	www.bvtpartners.ee
FR	ATIB	www.atib.fr
HR	Microclima	www.microclima.hr
HU	AIRVENT Légtechnikai Zrt.	www.airvent.hu
	Gevent Magyarország Kft.	www.gevent.hu
	Merkapt	www.merkapt.hu
IR	Fantech Ventilation Ltd	www.fantech.ie
IS	Blikk & Tækniþjónustan ehf	www.bogt.is
	Hitataekni ehf	www.hitataekni.is
IT	Icaria srl	www.icariavmc.it
NL	Ventilair group	www.ventilairgroup.com
	DECIPOL-Vortvent	www.vortvent.nl
	CLIMA DIRECT BV	www.climadirect.com
NO	Ventistål AS	www.ventistal.no
	Ventistål AS	www.ventistal.no
	Thermo Control AS	www.thermocontrol.no
PL	Ventia Sp. z o.o.	www.ventia.pl
SE	Nordisk Ventilator AB	www.nordiskventilator.se
SI	Agregat d.o.o	www.agregat.si
SK	TZB produkt, s.r.o.	www.tzbprodukt.sk

FINLAND

Komfovent Oy
Muuntotie 1 C1
FI-01 510 Vantaa, Finland
Tel. +358 0 408 263 500
info_fi@komfovent.com
www.komfovent.com

GERMANY

Komfovent GmbH
Konrad-Zuse-Str. 2a,
42551 Velbert, Deutschland
Tel. +49 0 2051 6051180
info@komfovent.de
www.komfovent.de

LATVIA

SIA Komfovent
Bukaišu iela 1, LV-1004 Riga, Latvia
Tel. +371 24 66 4433
info@komfovent.lv
www.komfovent.lv

Vidzemes filiāle
Alejas iela 12A, LV-4219 Valmiermuiža, Valmieras pagasts, Burtnieku novads
Tel. +371 29 358 145
kristaps.zaicevs@komfovent.com
www.komfovent.lv

komfovent®